Valena™ IN'MATIC

7 530 76/77, 7 530 72/78

legrand®

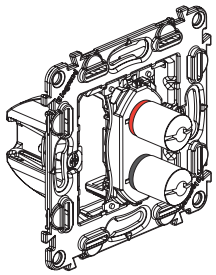

7 530 76

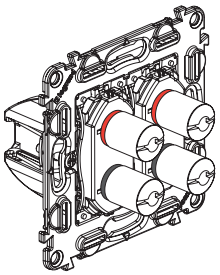

7 530 77

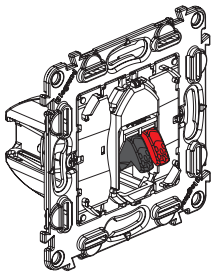

7 530 72

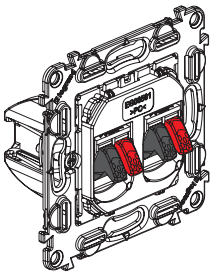

7 530 78

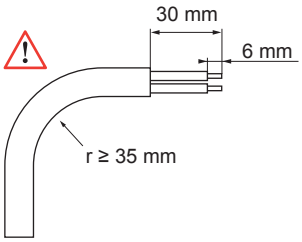

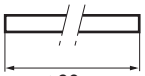

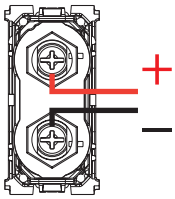

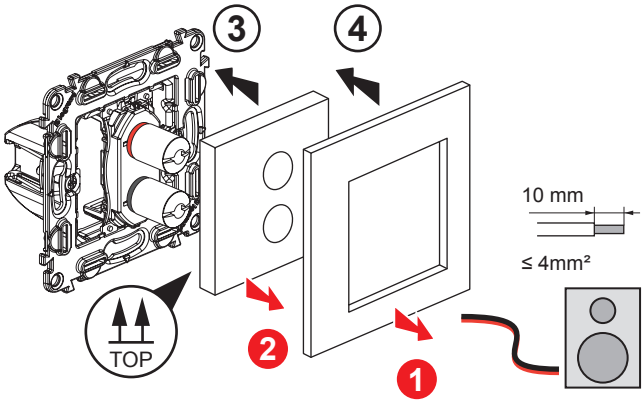

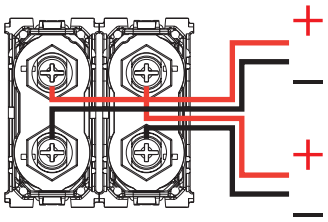

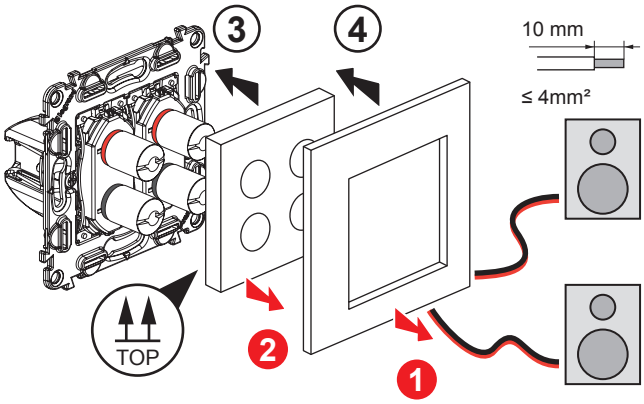

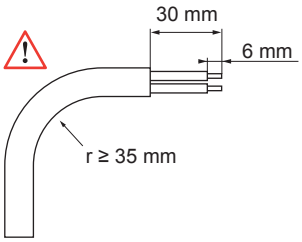

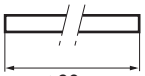

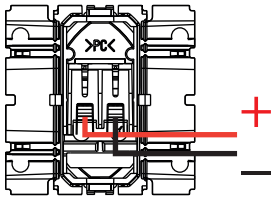

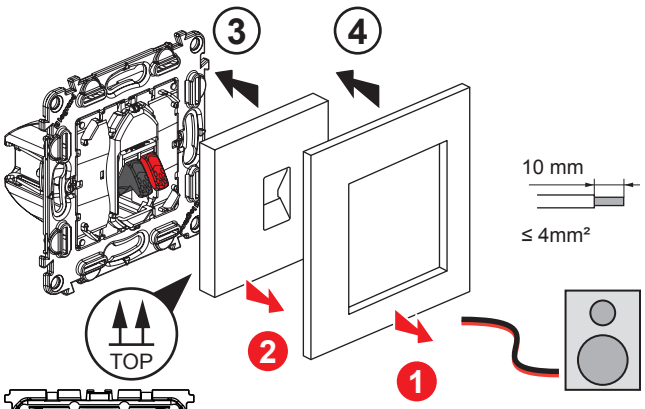

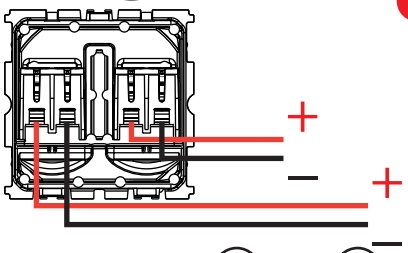

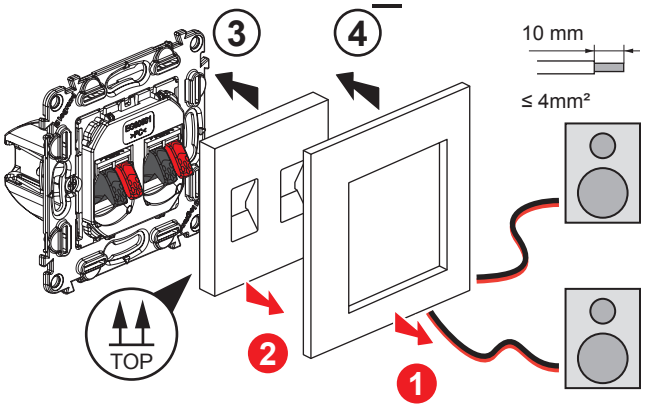

LE07189AA