Datasheet

BULLET™ TITANIUM

BULLET™ TITANIUM

Zero-Variable Outdoor Wireless Radio

Models: BM2-Ti, BM5-Ti

Fully Integrated Radio

Weatherproof Aluminum Casing

Directly Connects to Any Antenna with an N-Type Connector

UBIQUITI NETWORKS

Overview

Revolutionary Design

The Bullet™ M Titanium is the latest version of the popular Ubiquiti Bullet. Like its predecessor, Bullet M Titanium is a wireless radio with an integrated N-Type RF connector that can be directly plugged in to any antenna[1] to create a powerful and robust outdoor Access Point, Client, or Bridge.

The Bullet M Titanium features a tough weatherproof design. Made from aircraft-grade aluminum, the casing is designed to withstand nature's harshest elements.

With up to 600 mW of power and enhanced receiver design, the Bullet M Titanium is ideal for long-distance links, capable of up to 100+ Mbps real TCP/IP speeds over several kilometers.

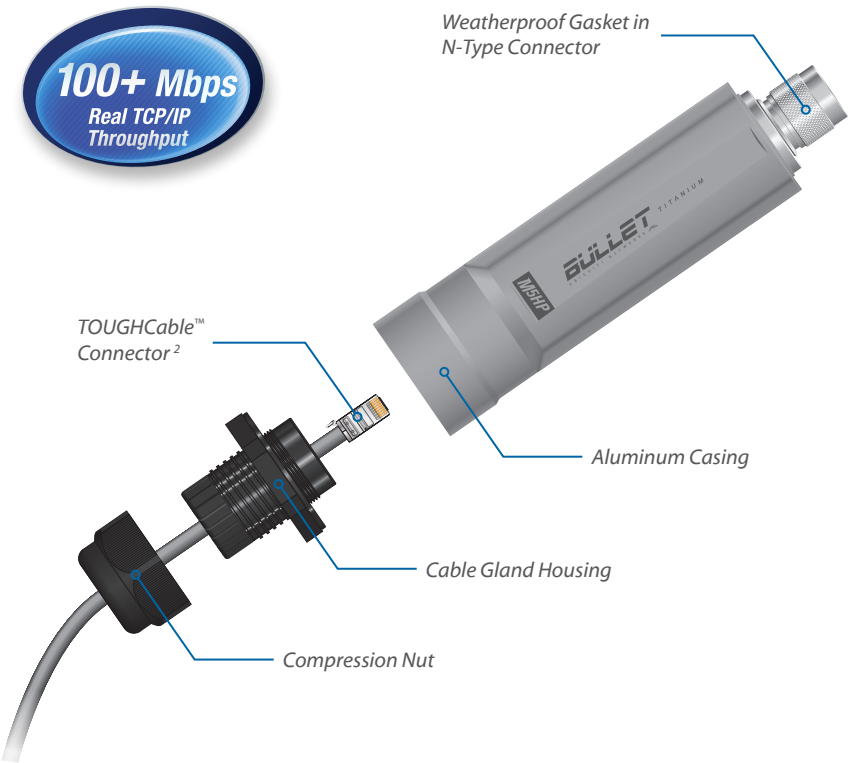

The *Bullet M Titanium* is engineered to survive extreme conditions. Featuring an upgraded aluminum casing, weatherproof N-Type connection gasket, and water-tight cable gland, the Bullet M Titanium is virtually *bullet*-proof.

Zero-Variable Deployment

The Bullet M Titanium eliminates the need to use RF cables and requires no special antenna or tools to install. No radio card / host board issues. No RF cable quality concerns. No mechanical stability concerns. No enclosure mounting requirements. With the Bullet M Titanium, operators can just plug and go.

Integrated airMAX™ Technology

The Bullet M Titanium can instantly become a powerful TDMA BaseStation utilizing Ubiquiti's breakthrough airMAX technology. With airMAX, PtMP networks can scale gracefully while maintaining high throughput and low latency performance.

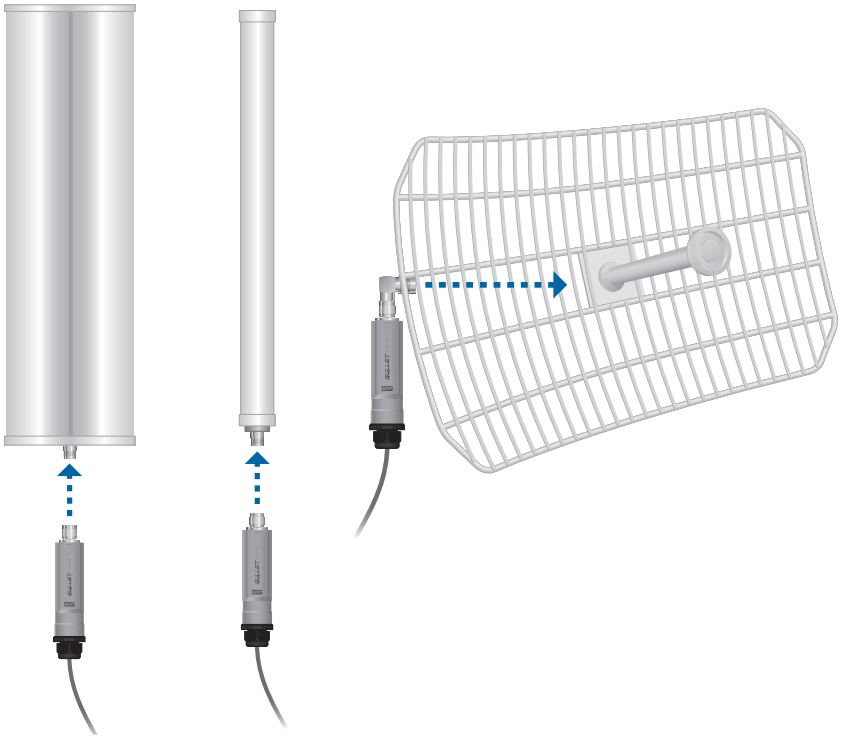

Any antenna[1] can easily be transformed into a powerful and robust Ubiquiti Access Point, Client, or Bridge by simply plugging in the Bullet M Titanium.

[1] Bullet M Titanium can be connected to any antenna with an N-Type female connector.
[2] For optimal performance and equipment protection, use Ubiquiti TOUGHCable shielded Ethernet cables.

Software

airOS™

airOS is a versatile, highly developed Ubiquiti firmware technology. It is exceptionally intuitive and was designed to require no training to operate. Behind the user interface is a powerful firmware architecture that enables high-performance, outdoor multipoint networking.

- Protocol Support
- Channel Shifting
- Spectral Width Adjustment
- ACK Auto-Timing
- AAP Technology
- Multiple VLAN Support
- DHCP Relay
- Multi-Language Support

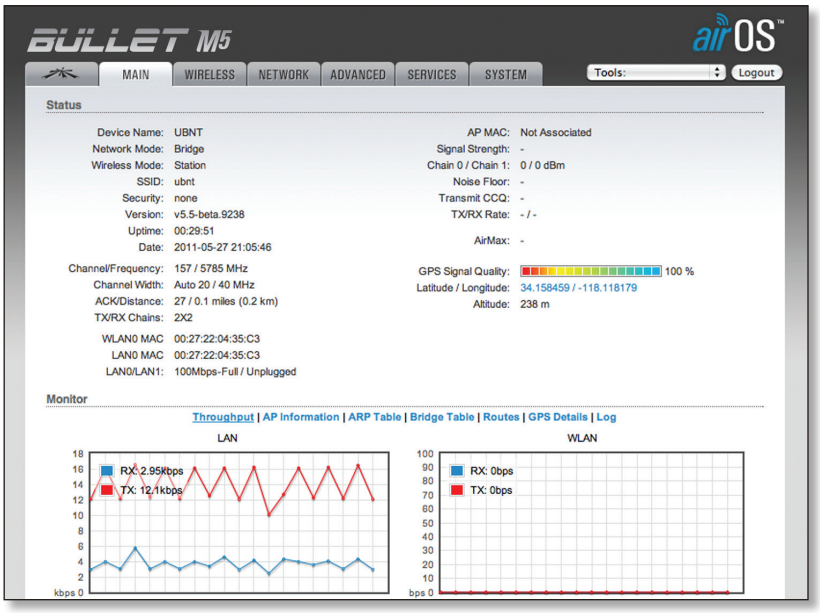

airView™

Integrated on all Ubiquiti M products, airView provides advanced spectrum analyzer functionality: waterfall, waveform, and real-time spectral views allow operators to identify noise signatures and plan their networks to minimize noise interference.

Waterfall Aggregate energy over time for each frequency.

Waveform Aggregate energy collected.

Real-time Energy is shown in real-time as a function of frequency.

Recording Automate airView to record and report results.

airControl™

airControl is a powerful and intuitive Web-based server network management application that allows operators to centrally manage entire networks of Ubiquiti devices.

- Network Map
- Monitor Device Status
- Mass Firmware Upgrade
- Web UI Access
- Manage Groups of Devices
- Task Scheduling

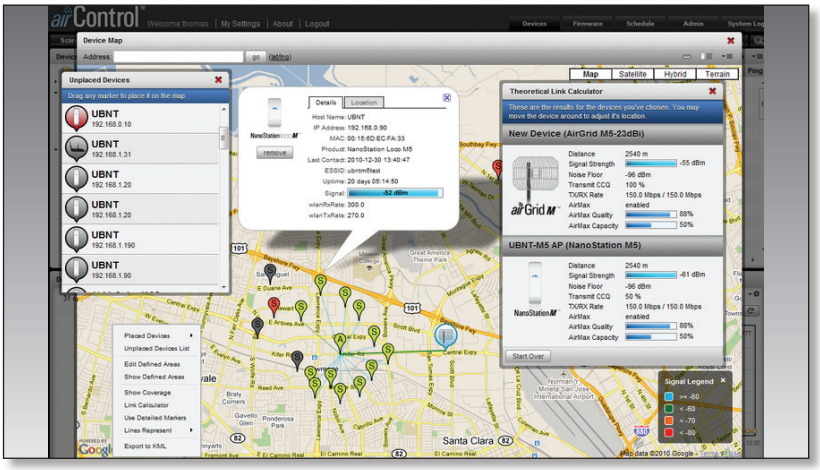

Specifications

System Information	
Processor Specs	Atheros MIPS 24KC, 400 MHz
Memory Information	32 MB SDRAM, 8 MB Flash
Networking Interface	(1) 10/100 Ethernet Port
Regulatory / Compliance Information	
Wireless Approvals	FCC Part 15.247, IC RS210, CE
RoHS Compliance	Yes
Physical / Electrical / Environmental	
Dimensions	190 x 46 mm
Weight	196 g
Enclosure Characteristics	Powder Coated Aluminum
Antenna Connector	N-Type Connector (male)
Power Supply	24V, 0.5A PoE Adapter (included)
Power Method	Passive Power over Ethernet (pairs 4, 5+; 7, 8 return)
Max. Power Consumption	
BM2-Ti	7 Watts
BM5-Ti	6 Watts
Operating Temperature	-40 to 80° C
Operating Humidity	5 to 95% Condensing
Shock and Vibration	ETSI300-019-1.4
Software Information	
Modes	Station, Access Point, AP Repeater
Services	SNMP, DHCP, NAT
Utilities	Site Survey with Preferred SSID, Antenna Alignment Tool, Discovery Utility
Security	WEP/WPA/WPA2
QoS	802.11e / WMM Support
Statistical Reporting	Ethernet Activity, Uptime, Packet Success/Errors

Specifications

Bullet M2 Titanium - Operating Frequency 2412 - 2462 MHz							
TX Power Specifications				RX Power Specifications			
	Data Rate	Avg. TX	Tolerance		Data Rate	Sensitivity	Tolerance
11b/g	6-24 Mbps	28 dBm	+/-2 dB	11b/g	24 Mbps	-83 dBm	+/-2 dB
	36 Mbps	25 dBm	+/-2 dB		36 Mbps	-80 dBm	+/-2 dB
	48 Mbps	24 dBm	+/-2 dB		48 Mbps	-77 dBm	+/-2 dB
	54 Mbps	23 dBm	+/-2 dB		54 Mbps	-75 dBm	+/-2 dB
11n	MCS0	28 dBm	+/-2 dB	11n	MCS0	-96 dBm	+/-2 dB
	MCS1	28 dBm	+/-2 dB		MCS1	-95 dBm	+/-2 dB
	MCS2	28 dBm	+/-2 dB		MCS2	-92 dBm	+/-2 dB
	MCS3	28 dBm	+/-2 dB		MCS3	-90 dBm	+/-2 dB
	MCS4	27 dBm	+/-2 dB		MCS4	-86 dBm	+/-2 dB
	MCS5	25 dBm	+/-2 dB		MCS5	-83 dBm	+/-2 dB
	MCS6	23 dBm	+/-2 dB		MCS6	-77 dBm	+/-2 dB
	MCS7	22 dBm	+/-2 dB		MCS7	-74 dBm	+/-2 dB
Output Power			28 dBm				
Range Performance			50+ km (Outdoor - Antenna Dependent)				

Bullet M5 Titanium - Operating Frequency 5170 - 5825 MHz*							
TX Power Specifications				RX Power Specifications			
	Data Rate	Avg. TX	Tolerance		Data Rate	Sensitivity	Tolerance
11a	1-24 Mbps	25 dBm	+/-2 dB	11a	24 Mbps	-83 dBm	+/-2 dB
	36 Mbps	23 dBm	+/-2 dB		36 Mbps	-80 dBm	+/-2 dB
	48 Mbps	21 dBm	+/-2 dB		48 Mbps	-77 dBm	+/-2 dB
	54 Mbps	20 dBm	+/-2 dB		54 Mbps	-75 dBm	+/-2 dB
11n / airMAX	MCS0	25 dBm	+/-2 dB	11n / airMAX	MCS0	-96 dBm	+/-2 dB
	MCS1	25 dBm	+/-2 dB		MCS1	-95 dBm	+/-2 dB
	MCS2	25 dBm	+/-2 dB		MCS2	-92 dBm	+/-2 dB
	MCS3	25 dBm	+/-2 dB		MCS3	-90 dBm	+/-2 dB
	MCS4	24 dBm	+/-2 dB		MCS4	-86 dBm	+/-2 dB
	MCS5	22 dBm	+/-2 dB		MCS5	-83 dBm	+/-2 dB
	MCS6	20 dBm	+/-2 dB		MCS6	-77 dBm	+/-2 dB
	MCS7	19 dBm	+/-2 dB		MCS7	-74 dBm	+/-2 dB
Output Power			25 dBm				
Range Performance			50+ km (Outdoor - Antenna Dependent)				

* Only 5725 - 5850 MHz supported in the USA

TOUGHCable™

OUTDOOR CARRIER CLASS SHIELDED

Protect your networks from the most brutal environments with Ubiquiti Networks' industrial-grade, shielded Ethernet cable, TOUGHCable.

Increase Performance
Dramatically improve your Ethernet link states, speeds, and overall performance with Ubiquiti TOUGHCables.

Extreme Weatherproof
Designed for outdoor use, TOUGHCables have been built to perform even in the harshest weather and environments.

ESD Damage Protection
Protect your networks from devastating electrostatic discharge (ESD) attacks.

Extended Cable Support
TOUGHCables have been developed to increase power handling performance for extended cable run lengths.

TOUGHCable Connectors

Specifically designed for use with Ubiquiti TOUGHCables and available in 100-pc. bags, TOUGHCable Connectors protect against ESD attacks and Ethernet hardware damage, while allowing rapid field deployment without soldering.

Bulletproof your networks

TOUGHCable is currently available in two versions: PRO Shielding Protection and CARRIER Shielding Protection.

TOUGHCable PRO is a Category 5e, outdoor, carrier-class shielded cable with an integrated ESD drain wire.

TOUGHCable CARRIER is a Category 5e, outdoor, carrier-class shielded cable that features an integrated ESD drain wire, anti-crosstalk divider, and secondary shielding. It is rated to provide optimal performance on Gigabit Ethernet networks.

Additional Information:

- 24 AWG copper conductor pairs
- 26 AWG integrated ESD drain wire to prevent ESD attacks and damage
- PE outdoor-rated, weatherproof jacket
- Multi-layered shielding
- Available in lengths of 1000 ft (304.8 m)

ESD attacks are the leading cause for device failures. The diagram below illustrates the areas vulnerable to ESD attacks in a network.

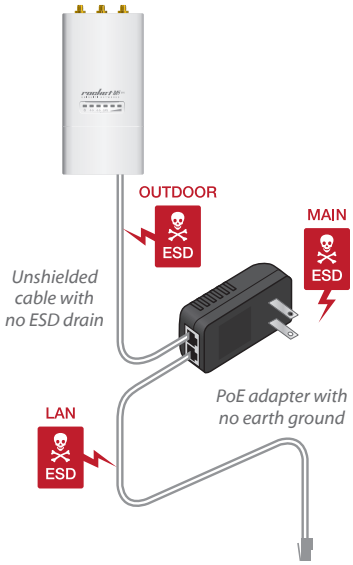

By using a grounded Ubiquiti Power over Ethernet (PoE) Adapter along with Ubiquiti TOUGHCable and TOUGHCable Connectors, you can effectively protect against ESD attacks.

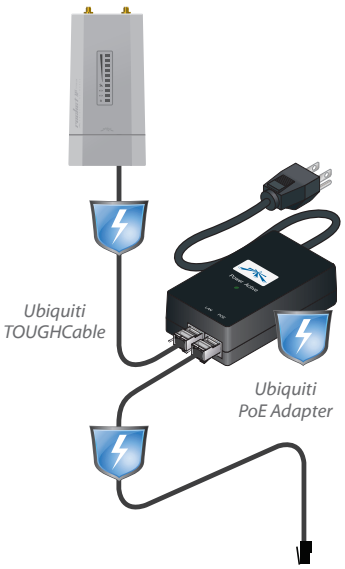

TERMS OF USE: Ubiquiti radio devices must be professionally installed. Shielded Ethernet cable and earth grounding must be used as conditions of product warranty. TOUGHCable is designed for outdoor installations. It is the installer's responsibility to follow local country regulations, including operation within legal frequency channels, output power, indoor cabling requirements, and Dynamic Frequency Selection (DFS) requirements.

For further information, please visit www.ubnt.com.

All specifications in this document are subject to change without notice.

© 2012 Ubiquiti Networks, Inc. All rights reserved.

UBIQUITI NETWORKS

www.ubnt.com

RRPH062712