Valena™ IN'MATIC
7 530 70

legrand®

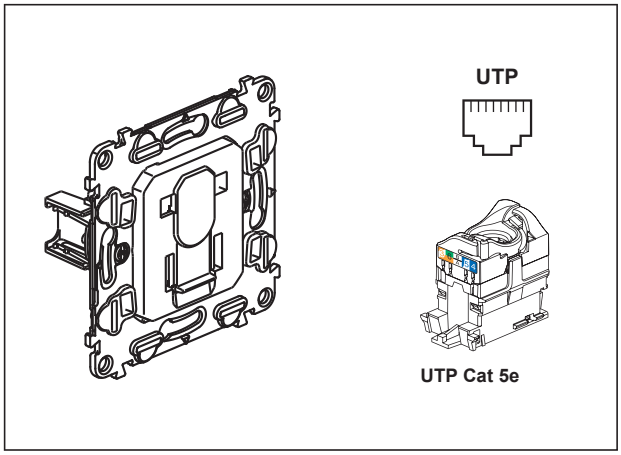

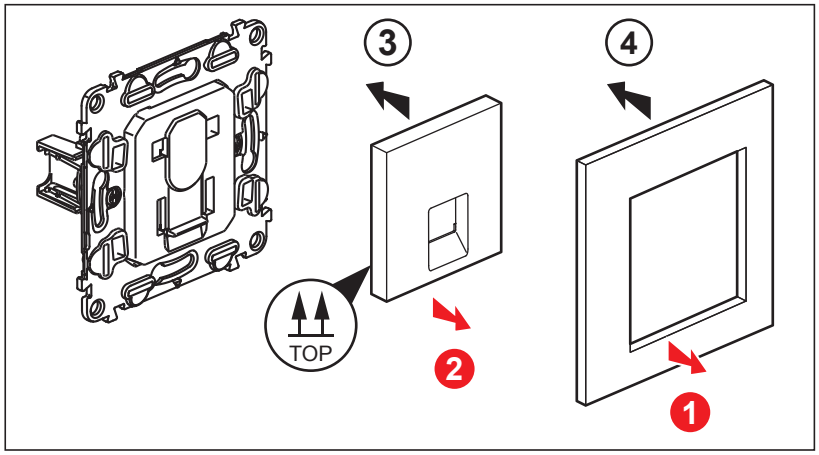

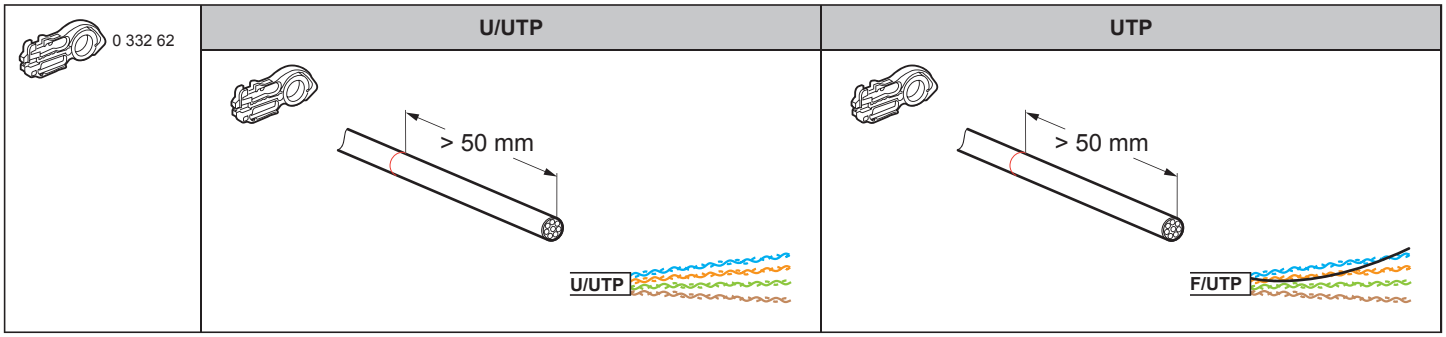

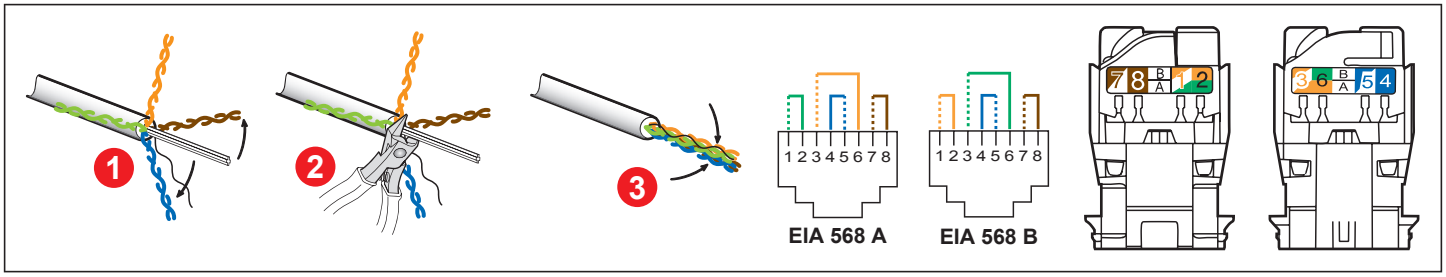

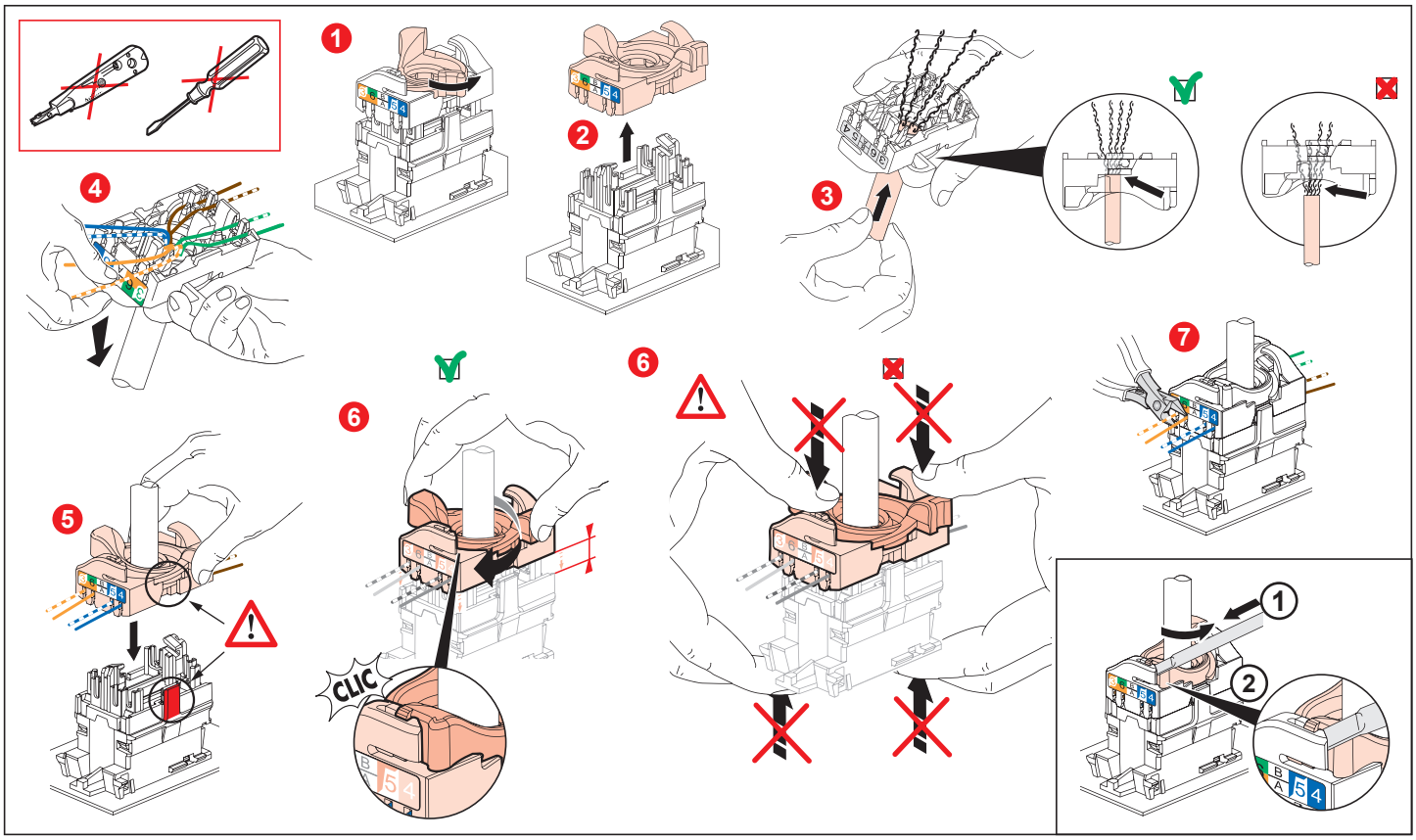

LE08525AA